nivito™

Art nr: RH 115

Polished Stainless steel

With shut off valve

EAN nr:
7350051950032

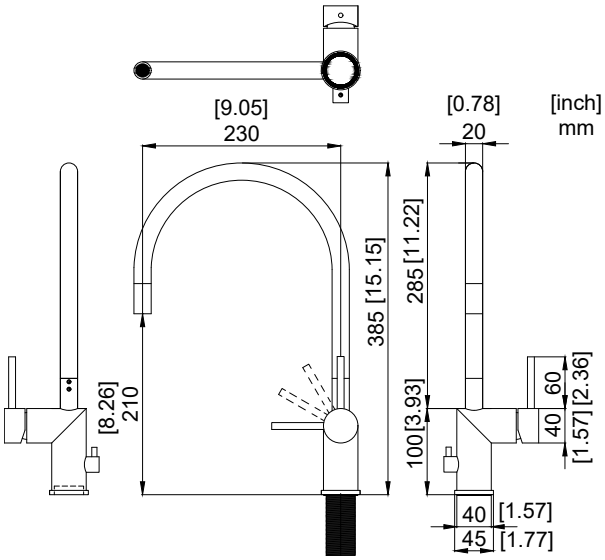

R h y t h m.

-Kitchen taps
-Soft PEX® hoses
-Cut-out dimension 35 mm
-Swivel range 360° and 150°
-Ceramic cartridge
-The copper does not oxidize
-With shut off valve

Technical specification

Application area: Tap water,
Pressure certified: 16 bar EN 817
The product meets the requirements of: NS-EN ISO/IEC 17065
Working pressure: 50 - 1000 kPa
Test pressure max 1600 kPa
Hot water connection: max. 80 ° C
Sound class: 1

Soft PEX® connections approved with DWGW
Length of connecting hose: 500mm
Type approved according to Sintef nr: PS 3552
The product meets the requirements of: NS-EN ISO/IEC 17065
Issued: 09.05.2019 Valid until: 01.06.2024
www.sintefcertification.no

Cartridge:

Kerox 35 mm
Endurance test: EN 817 70 000 cycles
ASME A 112.18.1M 500 000 cycles
Pressure test:
Pneumatic: 6 bar / 87 psi
Hydraulic: 35 bar / 500 psi

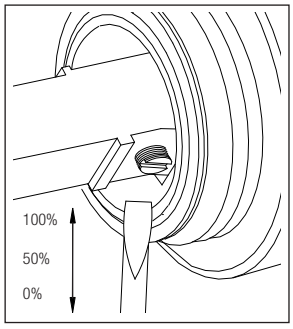

With volume limit screw

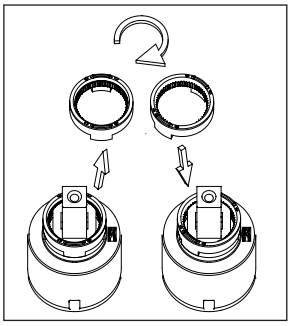

With hot limit ring

COPYRIGHT © Nivito | www.nivito.com | info@nivito.com | Sweden